Temperature Sensor

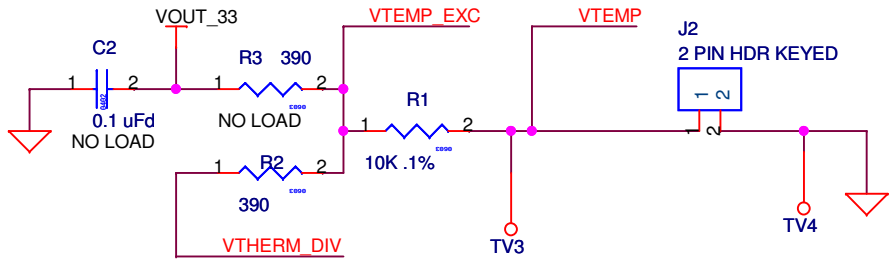

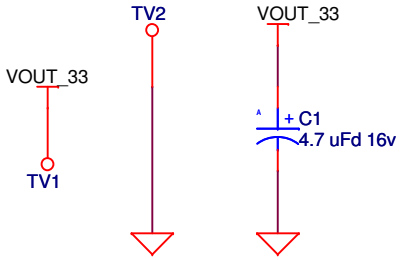

0.100" 8x2 Male Pin Header

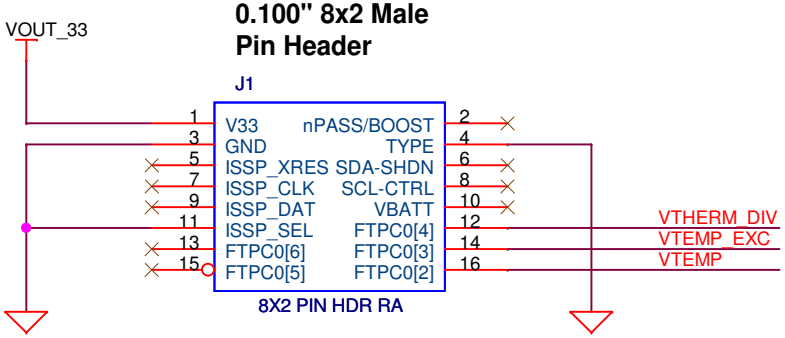

NOTE: This Expansion Board Does Not Have An Onboard Voltage Regulator - DO NOT Power With > 5Vdc

PCB:PDCR-9440

CYPRESS SEMICONDUCTOR © 2007

Title	CY3271-EXP1 FIRST TOUCH RF THERMISTOR DAUGHTER BOARD	
Size A	Document Number REF-14668	Rev **
Date: Wednesday, October 22, 2008	Sheet 1 of 1	